QUANTITATIVE MODEL OF ULTRASOUND PROPAGATION IN BIOLOGICAL MEDIA

AnaMaria CIUBARA[1], Dana DOROHOI[2], Feride SEVERCAN[3], Dorina CREANGA[4]

Mathematical modeling was proposed for the measurement results obtained for samples of biological tissues exposed to controlled beam of ultrasound. The laboratory determinations that underlined the quantitative approach were carried out on the propagation speed of 1 MHz ultrasounds in hepatic and sanguine tissues. The differential equation that was proposed describes the dependence on the temperature of the ultrasound propagation speed in liver and blood tissue samples, the calculated values being in the first approximation concordant with those estimated experimentaly.

Keywords: ultrasound speed, temperature variation, biological media.

1. Introduction

Among non-invasive investigation methods widely applied in medicine the ultrasound based scanning continues to be in the focus of both theorists and experimentalists. While sophisticated display techniques provide detailed visual insight and elaborated metrical procedures on the patient body the basic phenomena underlying the ultrasound imagistic still need further practical and mathematical approach in order to diminish relative side effects or recording artifacts. For practical purposes of medical diagnosis with ultrasounds the propagation speed and attenuation coefficient are mostly studied. In some body tissues and for certain temperature ranges positive dependence on temperature were recorded while for other negative variations were measured – frequency domain being also a possible factor that interfere with propagation medium features. Experimental study [1] reported that critical frequency of 1-2 MHz marks the changing of attenuation coefficient variation with temperature: passing from increasing to decreasing curves. Interesting conclusion was given by comparing various animal species; the dependence on temperature of ultrasound speed as well as of attenuation coefficient was found different for the same tissue in different species [2]. Among theoretical studies one can mention the statistical

[1]Drd., University Grigore T. Popa, Faculty of Medicine, Iasi, Romania
[2]Prof., University Alexandru Ioan Cuza, Faculty of Physics, Iasi, Romania, e-mail:mdor@uaic.ro
[3]Prof., Middle East University, Department of Biological Sciences, Ankara, Turkey
[4]Prof., University Alexandru Ioan Cuza, Faculty of Physics, Iasi, Romania, e-mail:mdor@uaic.ro

approach of ultrasound imagistic proposed for the identification and classification of tissues based on the statistics of backscattered ultrasound signals [3]. But detailed quantitative description of ultrasound interaction with cellular components mainly of the various cellular and molecular processes like viscosity and relaxation phenomena represents a challenging issue for both physicists and biomedical engineers.

In this study we have estimated some of parameters of 1 MHz ultrasound interaction with biological samples with focus on the temperature influence and mathematical approach of measured data.

2. Materials and methods

Laboratory assembled set up used to measure acoustic wave velocity in biological tissue samples by direct method is presented in Fig. 1. The ultrasound source was composed from pulse generator with frequency of 10^3 Hz and radiofrequency oscillator with frequency in the range 1-4 MHz. The sample holder is adiabatically ensured with temperature adjusting device having an adjustable volume and volume changing controller. Working frequency was of 1 MHz. Density was estimated by gravimetric method with 10^{-4} g accuracy balance.

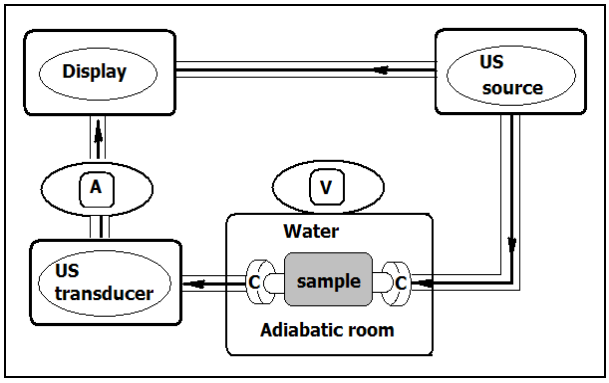

Fig. 1. Schematic representation of ultrasound exposure system; A- amplifier; V-volume variation sensor; C-generator and receptor crystals

For established length of the biological sample the measured ultrasound speed value is displayed as the sample size divided by the delay time given by the sample presence in ultrasound pathway.

Considering the importance of temperature effect on the microscopic structural and functional features of living cells and tissues the focus of the experimental and theoretical investigation was the ultrasound speed in biological tissues (rabbit blood and liver) for physiological temperatures (23-39 °C) [4].

3. Results and modeling

The parameters describing ultrasound propagation that are usually measurable in specialized experimental arrangements and that depend on each other are: velocity - u, acoustic impedance - Z, density - ρ, adiabatic compressibility coefficient - β of biological media:

$$Z = \rho u \text{ and } \beta = \frac{1}{u^2 \rho} \tag{1}$$

Temperature influences the propagation medium features which results in the dependence on temperature of ultrasound parameters. The results of ultrasound speed, u_{exp}, measured with about 0.1% accuracy, in *in vitro* samples of rabbit blood and liver at room temperature (23 °C) as well as the values computed for acoustic impedance, Z (eq. 1) and adiabatic compressibility, β, in comparison with water, are given in Table 1. Data are comparable with literature ones for the same range ultrasound frequency [5].

Table 1

Results of experimental measurement and assessing at room temperature (23°C)

	ρ(kg/m^3)	u_{exp}(m/s)	$10^{-6}.Z$(kgs^{-1}m^{-2})	$10^{10}.\beta$(mkg^{-1}s^{-2})
Water	1000	1480	1.48	4.565
Blood	1060	1547	1.64	3.941
Kidney	1069	1598	1.7	3.699

According to Fig. 2, the best fit of ultrasound velocity dependence on temperature is given by the parabola curve:

$$u_{fit}(T) = A + B_1 T + B_2 T^2 \tag{2}$$

with good correlation coefficients, R^2 (Table 2) for all three discussed samples.

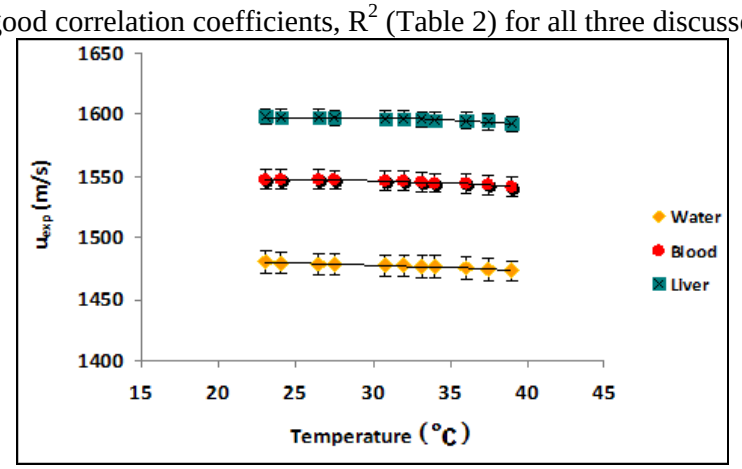

Fig. 2. Ultrasound speed u_{exp} (m/s) measured in blood and liver compared to water for different temperatures (°C)

Table 2

Regression polynomial coefficients

	A (m/s)	B_1(m/s/grad)	B_2(m/s/grad^2)	R^2
Water	1475.098(±3.623)	0.530(±0.239)	-0.015(±0.004)	0.98391(±0 0.03)
Blood	1531.335(±3.990)	1.287(±0.264)	-0.026(±0.004)	0.977(±0.04)
Liver	1581.605(±4.338)	1.311(±0.287)	-0.026(±0.005)	0.970(±0.03)

For the ultrasound frequency of 1 MHz, higher speed values were obtained for the same temperature range for liver compared to blood and for blood compared to water, with highest correlation coefficient for water.

To propose a mathematical equation describing the data dependence on temperature ultrasound interaction with living tissues needs to be considered mainly the physical processes with consequences on the cell biochemistry, determined by the propagation medium viscosity and relaxation time and also by the ultrasound frequency. More viscous tissues absorb more energy since more intensive friction forces developed between vibrating molecules convert mechanic wave energy into propagation medium internal energy – thus blood attenuates ultrasound more than water for example and liver more than blood – which is of practical interest for echography. The mechanic energy absorption is higher too for longer relaxation time of molecules reverting to their coordinates after the interaction with propagating waves as well as for higher ultrasound oscillating frequency. In [6] it was reported that in fatty tissues a negative dependence of ultrasound speed on temperature was observed; this appears to be in concordance with the data measured in the above experiment. In [7] it was showed that at temperatures below 40 °C the attenuation coefficient has a negative dependence on temperature – discussion being carried out on the implications of these results for improved diagnostic procedures. Computational studies revealed also temperature influence on lipidic structures [8, 9].

In the range of our experimental study, we consider that a good approximation can be obtained using a simple first order differential equation:

$$\frac{du}{dT} = -aT + b \tag{3}$$

with solution:

$$u_{calc}(T) = -a\frac{T^2}{2} + bT + u(T_0). \tag{4}$$

where $u_{calc}(T_0)$ is the estimated ultrasound speed at the room temperature (Table 1). The parameters *a* and *b* have been proposed as related to the sample properties (mainly friction interaction between oscillating molecules and the relaxation phenomena),– as suggested by the fact that the measured ultrasound delay - during propagation through the investigated sample, is higher for more viscous medium like blood compared to water and liver compared to blood.

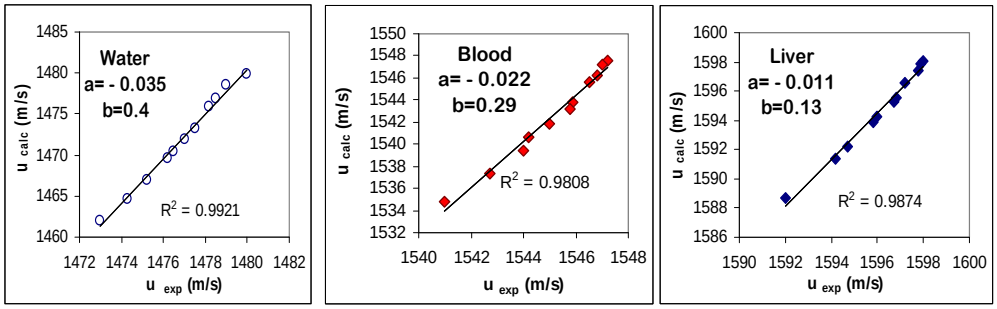

Fig. 3. Comparison between $u_{calc}(T)$ -calculated ultrasound speed values and $u_{exp}(T)$ - measured experimentally; *a* and *b* are the two tissular parameters

The term weighted by parameter "*a*" is proposed as a direct measure of tissue viscosity due to the friction forces between molecules oscillating following the interaction with ultrasound.

For each analyzed biological sample the values of "*a*" and "*b*" that led to best correlation between calculated speed values and experimentally measured ones are given in Fig. 3. It can be seen that both ultrasonic theoretical parameters change in absolute values when passing from water (a=0.035, b=0.40) to blood (a=0.022, b=0.29) and liver (a=0.011, b=0.13).

The parameter "*b*" is proposed as directly related to the content of water (diminished in liver (b=0.13) - compared to blood (b=0.29)) and indirectly related to the relaxation time. Like in the case of experimental data, the polynomial fitting best correlation coefficient between calculated and measured speed values resulted for pure water with diminution for blood and further for more complicated liver tissue. The results from Fig. 3 suggest that further development of the model is needed with better adjustment of all parameters.

6. Conclusions

The paper has underlined the specific dependence on temperature of 1 MHz ultrasound speed in rabbit liver and blood in the range of relatively low physiological temperatures. The differential equation proposed to approach experimental data takes into consideration the two main effects in the ultrasound interaction with biological samples: viscosity and relaxation phenomena. It was found a satisfactory correlation between experimental data and those provided by the proposed model. To improve correlation between calculated $u_{calc}(T)$ and $u_{exp}(T)$ measured experimentally new hypotheses related to physical interactions between ultrasounds and biological tissues are going to be considered.

R E F E R E N C E S

[1] *U. Techavipoo, T. Varghese, J.A. Zagzebski, T. Stiles and G. Frank*, "Temperature dependence of ultrasonic propagation speed and attenuation in canine tissue", in J. Acoust. Soc. Am., vol. 115, no. 6, 2004, pp. 2859-2865

[2] *R. T. Towa, R. J. Miller, L. A. Frizzell, J. F. Zachary and W. D. O'Brien Jr*, "Attenuation coefficient and propagation speed estimates of rat and pig intercostal tissue as a function of temperature", in 49, no. 10, 2002, pp. 1411-1415

[3] *S. Vaezy, M. Andrew, P. Kaczkowski and L. Crum*, "Image-guided acoustic therapy" in Annu. Rev. Biomed. Eng., vol. 3, 2001, pp. 375–390

[4] *F. Severcan, D. Dorohoi and D. Creanga*, "Ultrasound propagation through biological tissues", in Studia Universitatis Babes-Bolyai, Physica, Special Issue, 2001, pp. 168-175

[5] *T. Matsuhashi , M. Yamada, H. Shinzawa H and T. Takahashi*, "An evaluation of hepatic ultrasound speed in injury models in rats: correlation with tissue constituents" in J. Ultrasound Med. vol. 15, no. 8, 1996, pp. 563-570

[6] *G. Ghoshal, Adam C. Luchies, J. P. Blue, and M. L. Oelz*e, "Temperature dependent ultrasonic characterization of biological media" in J. Acoust. Soc. Am., vol. 130, no. 4, 2011, pp. 2203-2011

[7] *J. C. Bamber and C.R. Hill*, "Ultrasonic attenuation and propagation speed in mammalian tissues as a function of temperature" in Ultrasound Med. Biol., vol. 5, no.2, 1979, pp. 149-157

[8] *C. Stan, P. C. Cristescu, F. Severcan and D. Dorohoi*, "Effect of gramicidin S on the dipalmitoylphosphatidyl-glycerol thermotropic phase transition in DPPG/GS systems: A mathematical approach" in Mol. Cryst. Liq. Cryst., vol. 457, no. 1, 2006, pp. 27-41

[9] *C. Stan, P. C. Cristescu, F. Severcan and D. Dorohoi*. "The influence of gramicidin s on the thermotropic phase transition of dipalmitoylphosphatidylglycerol DPPG/GS systems: Experiment and computer model" in Rev. Roum. Chim. vol. 49, no. 9, 2004, pp. 777-782